HOLOGRAMA 3D

Effective Event Tech

REALFICTION™

PRODUCT CATALOGUE

dreamoc™ XL5

Version.1.0 - 2022

Copenhagen - Denmark

DREAMOC XL5

The Dreamoc XL5 is a high-quality 3D holographic display that creates an eye-catching visual experi-ence second to none. The display makes it possible to showcase your brand and products with amazing free-floating holograms that instantly sparks interest among people. Communicate details, features and unique selling points with 3D animated content that brings your branded message to life.

This mid-sized holographic display makes a great showstopper at events, tradeshows, or exhibitions where you want to drive awareness and brand recognition. Place it as a stand-alone installation or hang it on your booth wall to create an integrated setup that matches your existing design.

THE DREAMOC XL5 DISPLAY ENABLES YOU TO:

- Drive awareness to your brand and products at expos, events, and trade shows.
- Create engagement through touch screen interactivity.
- Visually explain features and details about your product portfolio.
- Create a stand-alone installation or integrate the display into the existing wall system of booth- or event design.

Create engagement with interactivity

Got multiple products or stories to showcase? No problem. The added touch screen setup allows your audience to explore your entire portfolio of solutions and take control of your branded content, directly at their fingertips. With a fully customizable interface, the touchscreen makes it possible to interact with virtual holographic content, successfully increasing the level of engagement and time spend with your brand even more.

ACCESSORIES

Our range of value-adding accessories is designed to elevate the experience at your event or expo even further, and make transporting your display both smarter and more efficient.

Flightcase

Flightcases make transportation easy, giving you knowledge that your holographic display will always arrive ready to wow.

All in one flightcase

The dedicated flightcase adds to the simplicity, by perfectly holding the XL5 display, SmartFrame stand, fabric branding, and interactive touchscreen during transportation.

Interactive touchscreen

Have an entire portfolio of products to show? The touchscreen allows your audience to explore your entire range of solutions at their fingertips. With a fully customizable interface, the touchscreen makes a great add-on for driving engagement.

Dreamoc XL5 basic stand

The Basic Stand is a great choice if you have the need to display products or samples at your event or tradeshow space.

Dimensions:
1035x1100x685 WxHxD
Weight 60kg

Freight (on pallet):
1200x410x800 WxHxD
85kg

Dreamoc XL5 SmartFrame stand

With the SmartFrame Stand, you can create a branded focal point at your event in just minutes. It positions your XL5 display at the perfect height, and the fabric branding is easy to apply and change for each event you attend. The SmartFrame Stand fits perfectly in the top compartment of the XL5 flight case.

Dimensions:
1035x1100x685 WxHxD
Weight 15kg

Freight:
1140x200x120 WxHxD
15kg

HIGHLIGHTED FEATURES

4K UHD resolution - Super high image definition makes holographic objects seam more real than ever.

Crystalline[tm] Optics - New high-end glass optics that is very durable and enables an even sharper image quality.

Built in audio - No need for external speakers – the audio is built in to the display. Easily adjust the sound level with the remote control.

Sturdy metal construction - The Dreamoc XL5 is designed and built to withstand the harsh conditions of being used at events and tradeshows.

Change 3D content in seconds - The top panel on the display makes it easy and fast to switch 3D content by MicroSD card.

All-in-one flightcase - The dedicated flightcase adds to the simplicity, by perfectly holding the XL5 display, SmartFrame stand, fabric branding, and interactive touchscreen during transportation.

SmartFrame stand - Assembled in just a few minutes, the SmartFrame stand positions your XL5 at exactly the right viewing height, and the fabric branding is easy to apply and change for each event you attend.

Interactive possibilities - Add interactivity to further strengthen the experience, captivate the audience and increase dwell-time.

SPECIFICATIONS

- Power
  Rated Voltage: AC 100-240 V~ 50/60 Hz
  Power Consumpt on: On Mode: 75 W Typ. / 110W Max.
  Power Type: Built-in Power.
  Cable: Schuko cable supplied.
- Screen
  Size: 43”
  Format: 16:9
  Resolution: 4K - 3840 x 2160p
  Brightness: 500 cd/m^2
- Audio
  Type: Built into screen
  Audio Power: 20W (10W x 2)
  Sound in/out: Yes
- Input:
  3 x HDMI, 1 x USB, 1 x RJ45, 1 x DVI-D, 1 x Audio In, 1 x External Control (RS232C IN)
- Supported file formats
  Video: H.265 (HVEC), H.264
  Audio: MP3, AC3, MPEG, AAC, HEAAC
  Still Image: JPEG, PNG, BMP

MEASUREMENTS

WxHxD: 1035 x550 x 685

Weight: 65 kg

Freight Dimensions (on pallet)

WxHxD: 1200 x 800 x 800

Freight weight: 80 kg

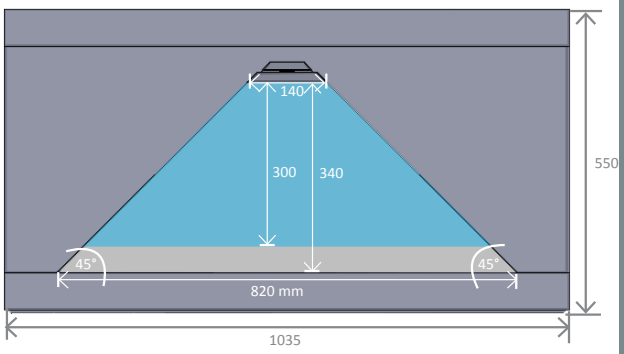

Dreamoc XL5 front view

The Blue color on the drawing shows the approximately hologram size on Dreamoc XL5

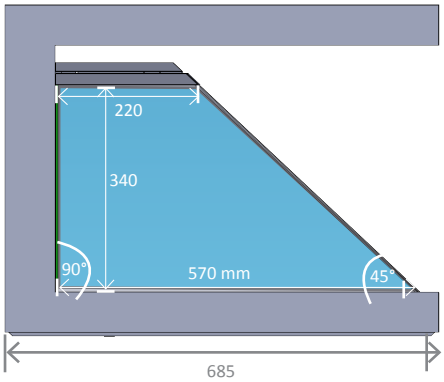

Dreamoc XL5 side view

The Blue color on the drawing shows the approximately hologram size on Dreamoc XL5

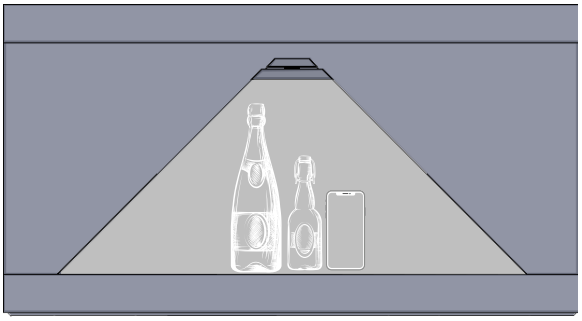

Dreamoc XL5 - Object reference

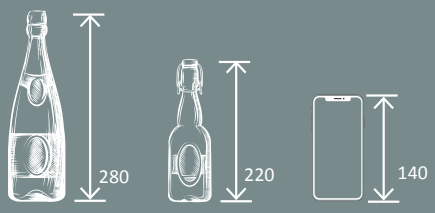

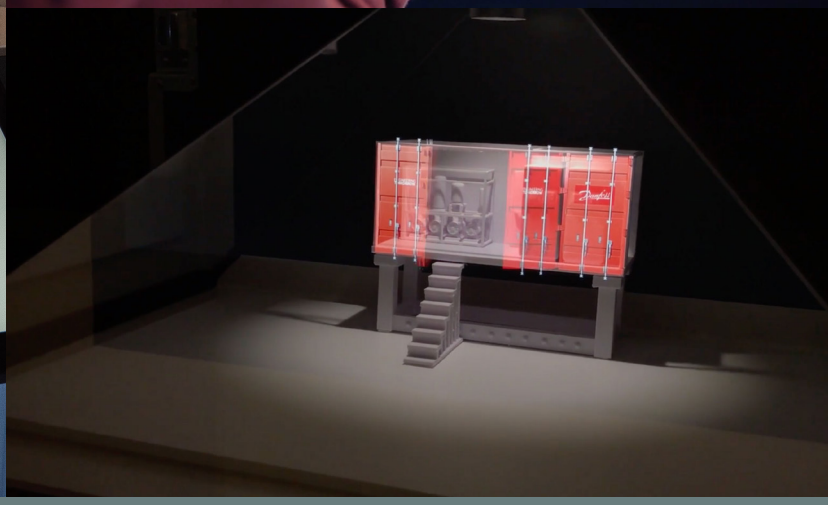

"The hologram makes it possible for us to show inner parts and features of our machines without having them standing physically"

- Merete Nygaard, Global Marketing Coordinator

ANDRITZ

"... we found that the holographic display met our criteria and look forward to further exploring how this technology can help us better"

Henry Steffensen, Regional Marketing Manager

Danfoss

"By using the display, we managed to secure 100% more prospect leads at the expo"

- Håkan Rosvall, COO

phi PHASE HOLOGRAPHIC IMAGING